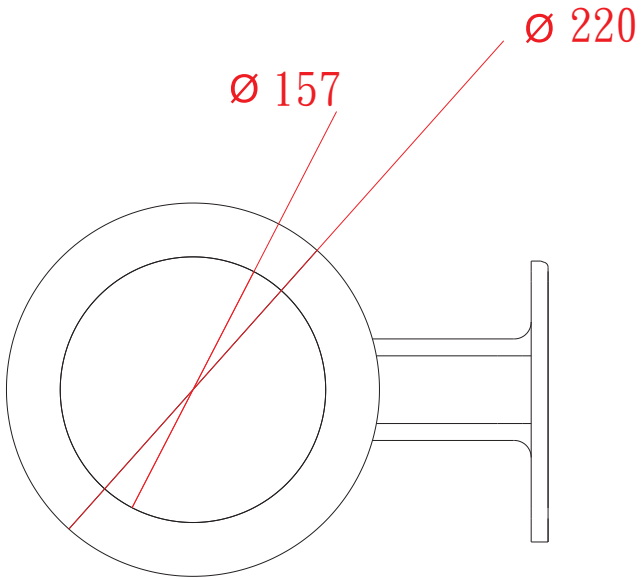
Ø 220
Ø 157

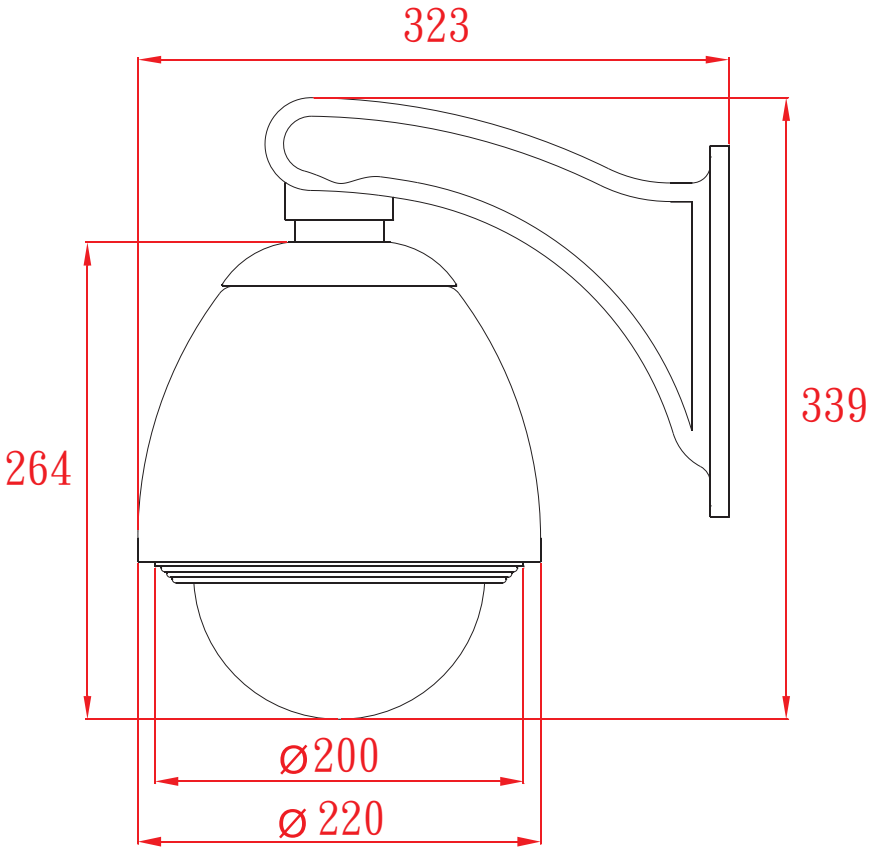
323
339
264
Ø200
Ø 220

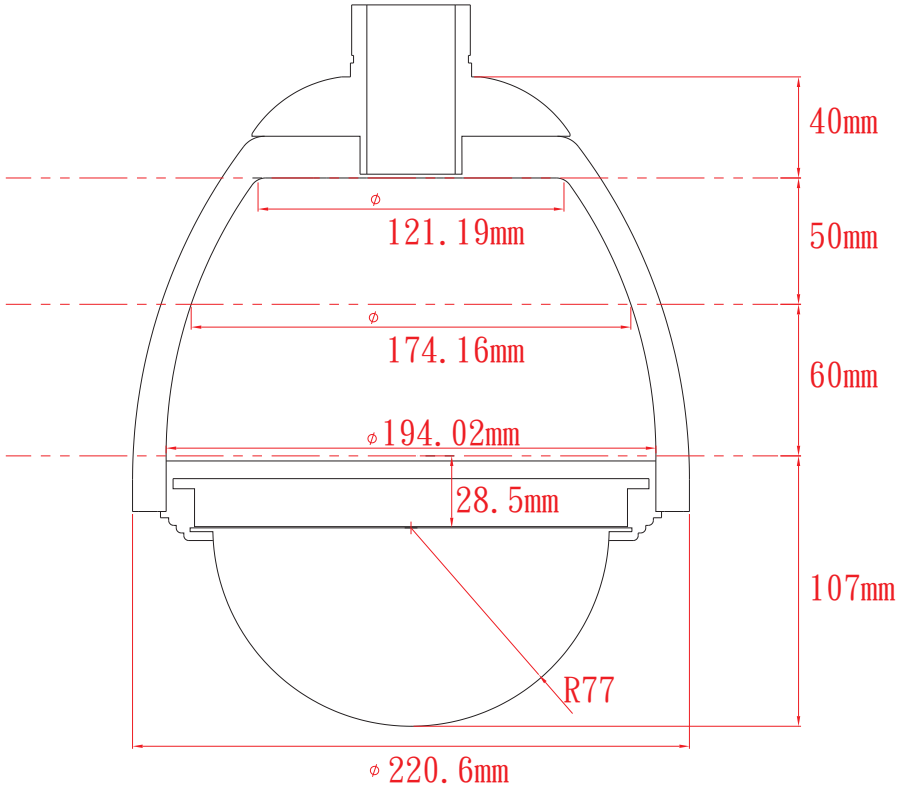
40mm
50mm
60mm
107mm
ϕ
121.19mm
ϕ
174.16mm
ϕ194.02mm
28.5mm
R77
ϕ 220.6mm